Independent watchmaking

In-Depth: The Development of Sartory-Billard and its Latest SB05

An industrial designer guiding watch enthusiasts along the creative journey.

Date
2022.02.25

Written By
Bjorn Meijer

Filed under
Independent watchmaking,
Knowledge,
Reviews,

Sartory Billard

Professional designers often have the urge, sooner rather than later, to implement their design ideas in a wristwatch. Alain Silberstein, for example, gave up his interior design career to become a “watch architect” as he described himself. At a panel discussion that took place during Dubai Watch Week 2021, he emphasised his career started when he “created my first watches [for my own] pleasure…. I never thought about my target”, though he added that watch buyers didn’t understand his vision in 1987, impeding the business aspect of his plan.

Fellow Frenchman Armand Billard started his watchmaking adventure in 2015 with the same basic idea. As an industrial designer with his own agency, he was fascinated by vintage Cartier watches with form cases in unusual and extreme shapes. Nothing like them were on the market at the time, so he recruited a friend, Ludovic Sartory, to create a modern take on those wild shapes.

Having designed professionally for domestic appliance makers, Armand does not see himself as an artist (unlike Alain Silberstein). Instead he focuses on the customer and sees his role as being a guide who helps the customer to understand what works in shapes and graphics. He believes that transmitting his professional experience to laymen should ideally empower them in their own decision making leading to a pleasing result.

Armand Billard. Image – Philippe Martz

But in his new role as a watch designer, Armand first had to acquire himself a lot of specific knowledge regarding manufacturing and the market. Specifically, he had to establish suitable processes to accomplish his goal of customised, high-quality watches for less than US$5,000, with a delivery time of not more than six months.

A central theme today when discussing the business with independent watchmakers is the challenge of finding reliable suppliers who can deliver within a decent timeframe. More often than not, components are delivered late – an untenable situation for makers who specialise in custom or bespoke watches. Kari Voutilainen overcame this constant struggle by acquiring control of both dial and case factories. So how does a (very) small brand like Sartory-Billard achieve its goals?

Armand's latest creation, the SB05

Over several weeks, a trip to Comblémine, and many conversations with Armand, I gained some insight into what it takes to be successful in this specific niche of independent watchmaking.

Interestingly, Armand's own measure of success is not only the customer enjoying the creative process, but also instilling enthusiasm in his suppliers so that his brand receives their support despite the tiny scale of Sartory-Billard's orders. His chosen path is no recipe to get rich, but rather demonstrates that hard work and experience is required to establish a brand in the watch market, especially today's market where new entrants are sprouting like mushrooms.

To understand how Sartory-Billard got to where it is, and more broadly to comprehend how a start-up watch brand develops and prospers, let's first look back at Sartory-Billard's past work.

Another variant of the SB05

SB01 – The accidental watch manufacturer

The watch Armand and Ludovic Sartory named RPM01 at its launch in 2015 was a purely personal project – they only wanted to make two watches, one for each of them. But they found out quickly that the costs for tooling to produce the case were no different whether two or ten were made. Therefore Sartory-Billard was set up, notably without the financial pressures that often accompany start-ups since both retained their full-time jobs.

The SB01

Armand always had an interest in the operation and function of industrial production equipment like CNC milling machines. In his mind, it is most important to understand the fabrication tools in order to understand their capabilities when designing new products. That is because design is not merely drawing something new but a process that continues on with following a project through to production, alongside working with engineers.

For his inaugural watch project he brought on board a French precision machining specialist that mills complicated watch cases for various brands in the past, including Hautlence. Their expertise was needed to realise a bezel he named *paraboloïde hyperbolique*, which translates literally as “hyperbolic paraboloid”, but essentially means donut-shaped.

To ensure the large case sat comfortably on the wrist despite a bezel of 46.5 mm, the case narrowed towards the back. The aesthetics relied also on a suitably domed dial sapphire crystal that had to be made in Switzerland by a sapphire specialist.

The hyperbolic paraboloid bezel

Equipped with a simple ETA 2824-2 movement, the watch retailed for €2,900, which left only a minuscule margin for Sartory-Billard. Despite the reasonable price, it took about two years to sell 30 watches.

That taught Armand an important lesson: the capabilities of tools and machines cannot be the guiding principle when creating watches to sell. Furthermore, consumers were unable to visualise the complex and expensive case shape as the watch was sold mainly online; a tactile, tangible experience was necessary to appreciate the design.

Still, the SB01 left its mark on the brand. Armand retained the brand logo that was based on the SB01's bezel, along with the custom font for numerals. A different take on this bezel shape would emerge four years later on Greubel Forsey's sports watches, where expensive-to-produce details are more easily executed given the brand's customary price range.

SB02 – Overwhelming the customer with choice

The next stage of development of Sartory-Billard called for extensive customisation in options and combinations. Already, the two-colour livery of the SB01 hinted at the potential demand for such flexibility.

The case and bezel of the SB02 had still curved shapes, while the movement was a Miyota 8215, with a subcontractor in France assembling the watches. Beyond that, the SB02 was almost entirely customisable.

Iterations of the SB02

On offer were 15 options for the bezel, which was secured by four screws with the intention of allowing the owner to replace the bezel. Additional bezels were available for €30 each and offered in numerous colours and surface treatments, as well as various materials including ceramic and carbon composite.

The customer’s choices included two different dial designs and 15 different straps. This results in about a thousand possible combinations, completely overwhelming the customer. Armand had put a lot of thought into a web-based configurator, only to realise that enthusiasts often played with it but never concluded with an order.

As a product designer Armand is proficient in creating technical drawings for production. That meant he could work direct with the engineer at a Chinese manufacturer of high-quality watch cases. Taking out the middleman allowed him to offer the SB02 for a retail price of €650 in 2017. Even with good publicity in the watch press it took him three years to sell about 300 of these well-made and low-priced watches.

Nevertheless, Armand had by then decided to become a full-time watch creator. He wanted to return to an enjoyable, hands-on job instead of managing employees, which was increasingly his role as his design agency grew. He sold his company and gave himself two years to come up with a commercially viable watch offering.

SB03 – Trial and error with in artisanal dials

At Baselworld 2019 Armand presented the SB03. With hindsight and after about 10 watches made, he declares it a “concept watch”. He gained experience with *guilloche* and natural stone dials, and also explored fabricating hands and chapter rings cut with a laser – in essence creating the mould for the successful SB04 that followed.

But he also realised the response to the SB03 at Baselworld indicated a lack of enthusiasm for a cushion-shaped case, particularly at a size of 42 mm. Armand concedes he over-designed the case, in part by insisting on an interchangeable bezel that required a complex system of springs and small hooks, because he wanted to offer customisation beyond the dial.

After returning from from Basel, Armand told himself it was time to make a round case and focus on the dial.

Variations of the SB03

SB04 – Guiding the creation of bespoke watches

Based on his experience as watch creator till then, Armand discarded what he calls “false good ideas” and set about designing an entirely new model with a round, 40 mm case, the SB04.

Instead of overt design elements, emphasis was now placed on subtle detailing and a well-crafted dial that became the canvas for personalisation.

This also meant taking dial fabrication and treatment in-house. But being a one-man workshop, Armand had to quickly learn different crafts he had no experience with.

The SB04 with a blue titanium dial

At a basic price of €3,000, the SB04 offered customers a highly-customised watch. Therefore its design had to incorporate aesthetics as well as a construction that provided for a maximum degree of freedom in dial materials and decoration. Equally important was avoiding unnecessary costs in the case manufacturing, which was one of the biggest factors behind the final price.

At the same time, the cost can also be driven by complicated logistics that extend delivery times, so Armand decided that subcontractors should only have to produce one specific version of each component in an attractive finish, thus avoiding expensive hand-finishing. At the same time, designing customisation and its limitations into the watch itself allowed Armand to cultivate a recognisable house style based on those fixed parameters, a trait absent in his past watches.

Cases are delivered to Sartory-Billard already finished. Image – Philippe Martz

Armand had in mind a classical case shape with a modern touch. A tall bezel and a slightly domed sapphire created the required space needed to fit thicker dials, like those with *guilloche* or made of stone, while the step in the bezel thinned it visually and added an interesting detail.

SB04 dials in Damascus steel (left) and malachite with a meteorite centre – the modular case construction can accommodate dials made of all kinds of materials, with the bezel, laser-cut chapter ring, and gaskets able to go with any dial, so no individual adjustment of the parts is required

Armand had already considered the different surface decorations on the case, namely mirror polishing, satin brushing, sandblasting, when designing the separate parts of the case. This avoided recesses and corners that were difficult to finish or required costly manual labour.

At the same time, he realised that textures were a crucial part of visual appeal. So he designed the case to have a combination of polishing and brushing that brought a touch of elegance to the design. The clever case construction allowed for sandblasted, matte surfaces, namely the case middle, to function as an additional decorative element without resorting to expensive hand finishing.

One of the novelties of the case construction Armand devised was the short lugs that were integral with the case back. One of his pet peeves in watch design are lugs that appear to be glued to the case, so integrating the lugs into the case back creates the desirable “gaps” or shadows between the case middle and lugs, even when the budget didn’t allow for traditional soldered lugs.

In-house craftsmanship

With the SB04, Armand embarked on an entirely new adventure. While he had years of experience producing technical drawings, actually fabricating the parts he designed was a totally new experience for him.

His pleasant demeanour allowed him to look over the shoulders of his subcontractors and learn along the way, while also gaining him access to industry specialist Philippe Narbel's workshop for a weeklong introduction to the secrets of perfect polishing. And Geneva watchmaker Cédric Johner taught Armand how high-end finishing can be done on the common Schaublin lathe.

The Schaublin in question

Sartory-Billard produces the basic parts with modern machines – CNC mills at subcontractors and a laser cutter for in-house work – but bespoke parts or customisation of standard parts requires traditional, hand-operated lathes like the classic Schaublin 70, which remain the most flexible and efficient tools despite their age.

Armand, for example, has to trim the tubes of the hands individually depending on the thickness of the dial, which results from its material. The lathes are also called into service for deburring and for the initial polishing of laser-cut parts like the hands, which usually emerge from the laser machine with rather rough edges unsuitable for a fine watch.

Armand at work on the lathe. Image – Philippe Martz

Used for cutting and engraving, the laser cutter is one of the most important tools for Armand. It allows him to inscribe whatever the customer wishes on the rim of the case back. Nine out of ten customers choose this personalisation, a fact that pleases Armand because it indicates that the watches are not being bought with the intention of selling them on.

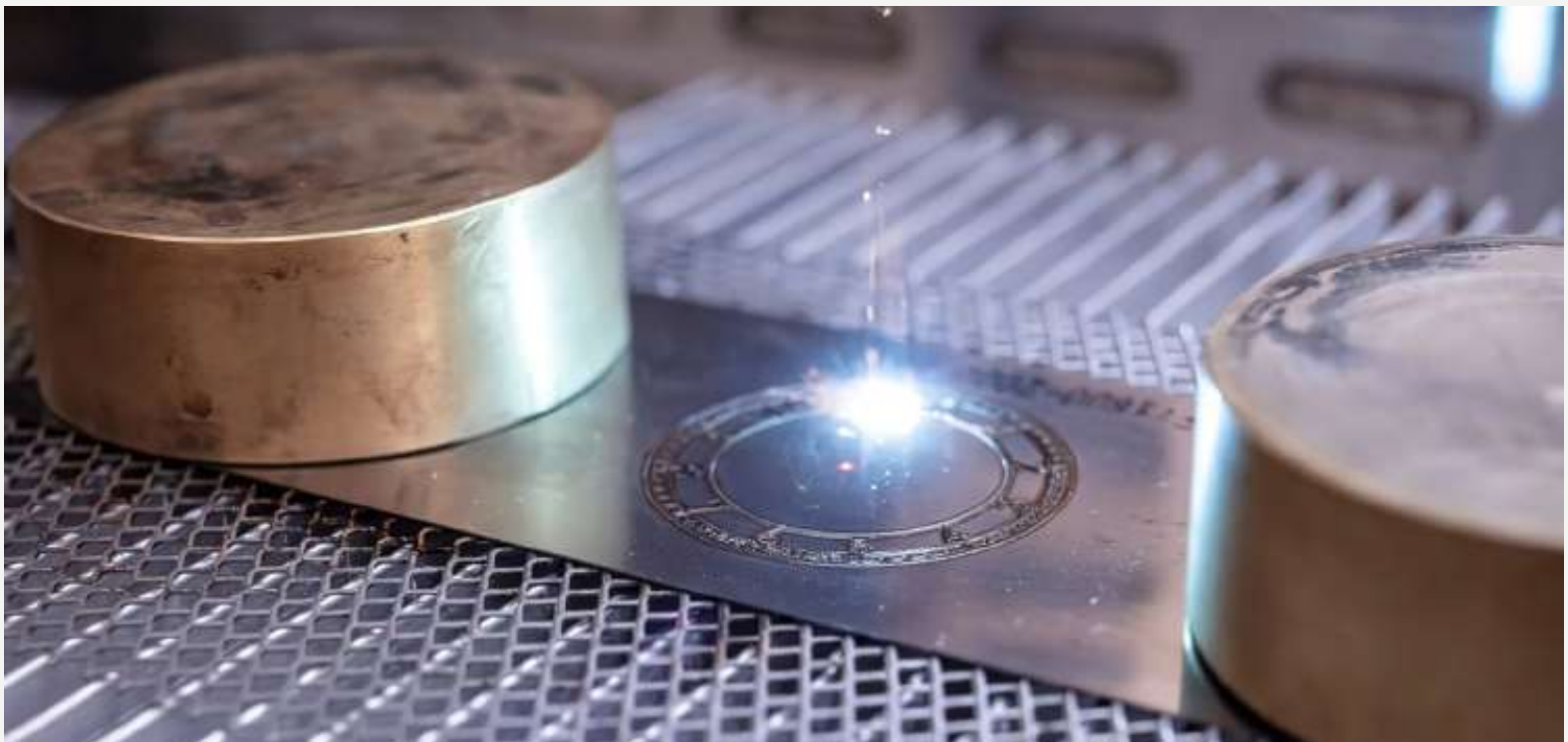

Laser cutting the chapter ring. Image – Philippe Martz

The high level of detail that is possible in the laser-cut chapter ring

Being able to accommodate whatever font or style the customer wants for the index ring, Armand tries to avoid the most problematic aspects of laser cutting by finessing the design. Nevertheless, calibrating the laser is so delicate that typically 50% of the chapter rings and indices are scrapped.

Chapter rings as well as titanium dials are frequently rejected – a collection of rejects is pictured above – while those that pass muster are finished by Armand himself in his atelier

The chapter ring is a single piece incorporating the hour indices, all of which are laser cut to the customer's design specification, making it possible to have the markers in almost any form

While cases are finished by suppliers, the hands and indices are polished, and lumed when necessary, by hand

Armand will continue with in-house titanium dials for the upcoming SB05, as he did with the SB04. Once again the dials will be coloured with an oxidisation process accomplished via a form of heat treatment.

Working with titanium is a particular pleasure for Armand, especially creating oxide layers that result in a wide spectrum of colours. Unsurprisingly, the quintessential version of the SB04 is arguably the one with a blued titanium dial.

While traditional methods use heat to create coloured finishes on titanium, he developed his own technique that does not rely solely on heat. And his heating method does not use an open flame but a heating plate or oven, which create more consistent colouring for larger parts.

Tools for titanium colouring – a heating plate (left), and an oven

The nature of the process means the resulting oxide layer – and the consequent colour – can be anywhere along a spectrum of colours, as in a rainbow. The oxide layer absorbs or refracts certain wavelengths of light and therefore creates a specific colour that the observer perceives, a physical phenomenon known as interference colour. When combined with the mirror-polished surface of the titanium, the colour and its strongly reflective results in dials that are particularly attractive.

The primary colours that can be achieved with the process are gold, burgundy, purple, navy blue, electric blue, and ice blue. Beyond that, Armand's proprietary oxidisation technique also allows him to colour guilloche dials. Image – Philippe Martz

Having gained substantial knowledge in colouring titanium, Armand is now able to offer cases and buckles that are heat blued just like the dials and hands.

Still in the experimental phase are hammered dials, whereby a dimpled surface is created by repeatedly pressing the dial disc – a physical process as opposed to the chemical process for colouring.

The main problem with the hammered finish is planar distortion, which is especially problematic for dials since they have to fit the hands and movement precisely. To resolve that, as well as make the technique more efficient and less labour intensive, Armand had an electrically-operated, adjustable machine built. At the moment he is also developing a process that uses the laser cutter to create textured patterns for the dial.

Applying dimples to the dial by hand

Small instruments and brushes are used to create the

hammered dial finish

Supporting the client along the custom journey

Armand's business is based on accommodating the client's request, as opposed to imposing his taste as a designer. "Custom" watches mean that the customer must also invest a personal effort in creation, not unlike visiting the tailor several times to discuss details and try on a bespoke suit as it is being put together.

"I want to make a watch that everybody can put his personal and aesthetic intention into the watch," explains Armand, "I am the maker, so my job is guidance."

"I truly believe that everybody has a creative part inside himself, but sometimes it's difficult to express and I will take them by the hand, help them, expand their creativity, and I will make a watch for them."

In his opinion, the design process should also be a fun experience for the customer. Armand learned from a friend running a high-end hotel business in the suburbs of

Paris that you cannot offer guests, who already live the good life, the clichéd “luxury” that is already part of their everyday lives. Instead they have to be surprised, for instance, with a surprise wakeup call at five o’clock in the morning inviting them to bake their own bread for breakfast, guided along by a professional baker.

Since colours are almost impossible to precisely define on a screen, Armand does not hesitate to send customers to their local paint merchant to look through the Pantone samples and come back to him with a specific colour code. Image – Philippe Martz

Armand’s marketing is limited to regular Instagram posts that show the watches he is working on. His business structure also means he cannot widen his distribution with third-party retailers, as there are no margins built into the retail price. That said, his collaboration with collector Amr Sindi, known as The Horophile, gave the SB04 a big boost and made it popular on social media. Nowadays, Armand relies on word-of-mouth recommendations from his customers.

Looking at the discussion of Sartory-Billard on forums and Instagram, I was surprised to find many enthusiastic reports on the SB04 by collectors of high-end watches that cost substantially more. Given their collection already centres on far pricier watches, why did these collectors go for an SB04? I got in touch with three of them to uncover the rationale behind their commissions.

Ashraf

“I’m one of those people who loves beautiful things. They need to have elegant lines and be pleasing to the eye,” says Ashraf, “Everything needs to line up. I strive for perfection.”

The price bore no influence on his decision to buy an SB04. Rather, he saw an opportunity to complement his matching burgundy belt and Corthay Arca shoes with a dial of the same colour. Since all Sartory-Billard straps are customised to each watch, red stitching could bring additional colour coordination. His brief to Armand was therefore quite simple: “Create a watch that complements my shoes.”

Ashraf was not only amazed at how accurately Armand could indeed match this specific colour, but at how well the customer experience at Sartory-Billard equalled that at Pierre Corthay, an artisanal Parisian shoemaker where patient guidance made the bespoke shoe journey a joy.

“Even though we were thousands of miles away,” says Ashraf, “Thanks to modern technology, Armand was able to guide us through the process with the utmost care and attention.”

Ashraf's matched set of shoes, watch, and belt

Adam

Adam focuses his collection on independents but of a broad spectrum that covers Greubel Forsey and MB&F to traditional timepieces by Voutilainen. He simply enjoys the beauty of quality.

He was attracted to the SB04 for its level of craftsmanship and customisation. Adam confided that the affordable price of the SB04 encouraged him to experiment, enabling risk taking that would have been difficult with a more expensive watch.

Adam enjoyed working with Armand. He admits in being poor at illustrating his own ideas, so he sent Armand his specifications in writing.

With Armand's quick responses, communication turned out to be easy, even without meeting personally. As a result, the experience of creating a custom watch with Armand turned out to be very similar to that in commissioning watches from other more established watchmakers.

Adam's SB04 alongside some of his other watches

SHW

SHW's watch collection is diverse and includes "watchmaking from around the world", even including railroad pocket watches, but the primary focus is on vintage and independents. He is particularly fond of independents who allow him "to meet, interact, and participate in designing, alongside with the masters that design and make watches". He says "it provides a personal connection for me, which, as I've gotten older, has become more important."

SHW is a member of a small group of collectors who are very private. He became their point of contact with Armand when they decided to commission a group watch. "We used spreadsheets, pictures and drawings as much as possible when communicating between our members, me and Armand," he explains.

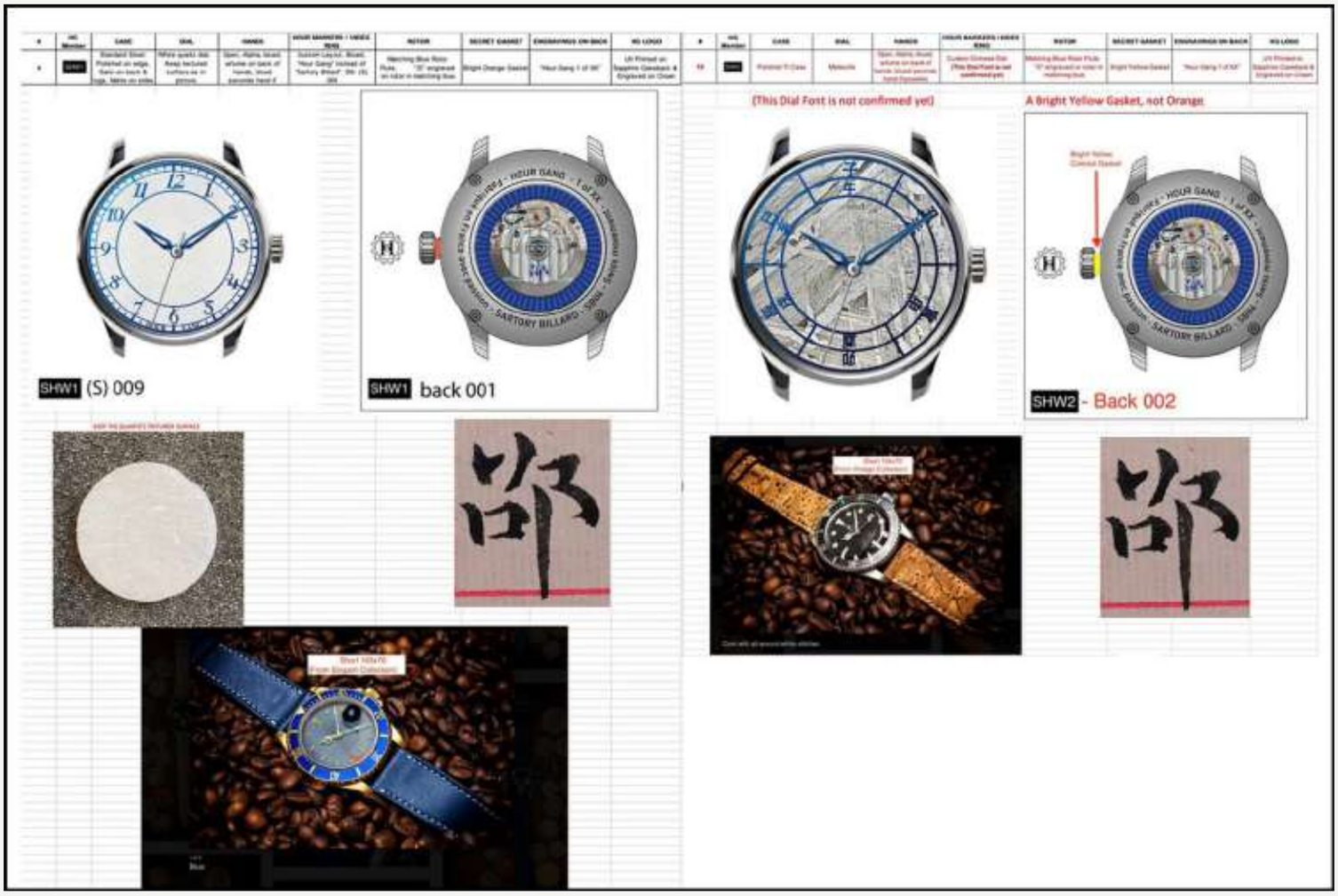

Acting as coordinator for a group of friends, SHW provided Armand with detailed instructions for each watch, including pictorial samples for reference. Such elaborate specifications from a client is atypical in Armand's experience

It all worked perfectly despite each of the 11 group watches being completely different. "At times I, and others, had some ideas that I thought were not realistic," recalls SHW, "But Armand listened and thought about every idea and concept that we brought to him."

"To our very happy surprise, most of the time Armand said 'yes, this can be done'," continues SHW, "When something could not be done, Armand always explained why and he would suggest feasible alternatives. Knowing why things couldn't be done also allowed us to come up with alternatives as well."

Consequently, "the entire project was very interactive and extremely exciting with seeing concepts and designs converted from people's ideas into a real, physical object".

A selection of SHW's watches

SB05 – Establishing a house style that accommodates customisation

With so many examples of the SB04 joining collections composed of higher-end watches, several customers came back to Armand for a repeat of the creation process, but asked for a watch with a better movement, along with a slightly smaller case and a bit more refinement in the details, essentially something slightly more upmarket.

This request took Armand by surprise, as he did not except that his brand would be accepted so quickly in a higher price range. But it does confirm how fast the circle of mature collectors who look beyond a brand has grown.

Armand responded to that demand with the SB05. Having initially ordering parts for 25 watches, Armand upped his order but remained overly prudent, so he had to stop taking orders after hitting 75 watches within days of showing renders of the SB05.

The diverse and complicated processes required to create each custom SB05 starts with a rendering programme that is an upgrade over that used to design the SB04. The design software creates more detailed renders that better convey the end result to the customer. Armand keeps clients updated almost in real time with renderings sent via WhatsApp, in a back and forth with the client that allows Armand to tweak designs on the go, speeding up the process of realising the client's vision for a watch.

The SB05s ordered by (left to right) Ashraf, Adam and SHW. They all have specified a restrained, classical design in keeping with Armand's concept of the SB05

Beyond his experience with the SB04, Armand also relied on input from specialist suppliers as he created detailed renderings of the SB05. With that input, the renderings are progressively refined and filled out in several phases. And it was the final, phase 4 rendering that Armand used to launch the SB05.

Armand associates a small second with dress watches and he wanted to go in this direction with the SB05, while adding elements that emphasise a third dimension by adding more depth to the dial, resulting in the first phase of the design (above left). To increase the customisation options, the dial was to consist of three separate parts, while a pad-printed sapphire disc for numerals and indices allowed the use of very diverse dial materials. To add three-dimensional elements, the hands and trim rings to hide dial joins got more substantial in phase 2 (above

right).

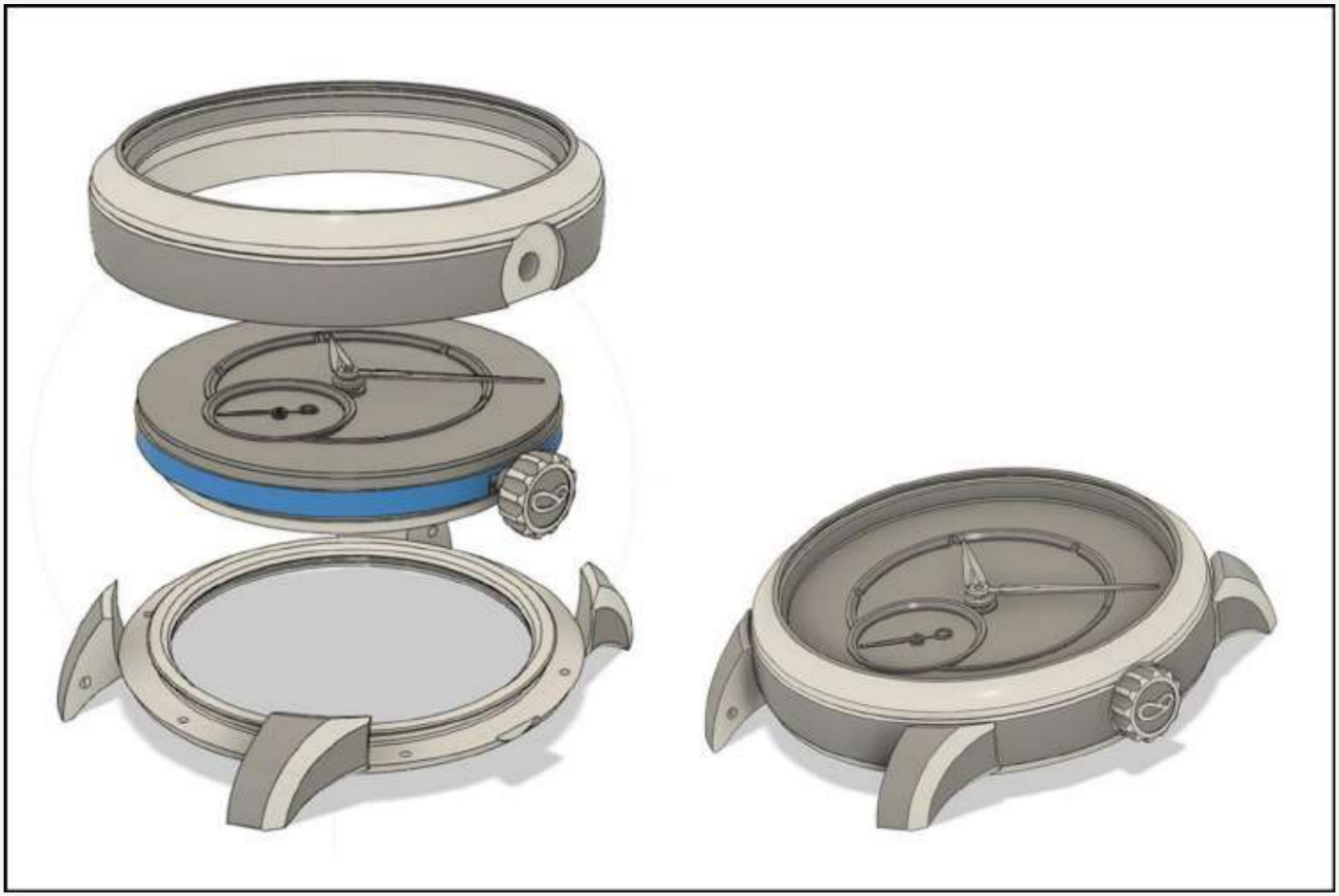

The proven case construction design of the SB04 was initially reused for the SB05 because Armand wanted to avoid too much hand-finishing in order to keep the price difference between the two at the absolute minimum. So the lugs were integrated into the case back once again, creating the impression of separate lugs without the expense of soldering.

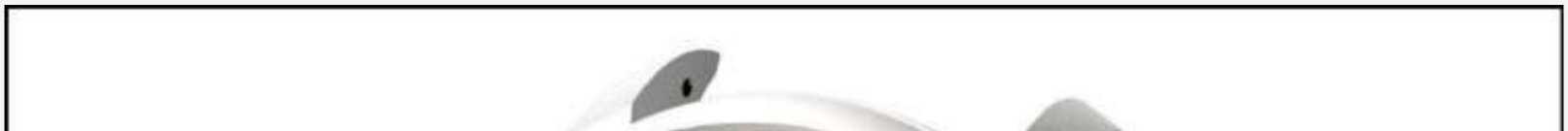

With the SB04, Armand sent customers updates as often as every two hours, or more usually twice a day, since he was responsible for the assembly and dial finishing. The frequency of communication also meant that customers could request last-minute changes. But since the SB05 is assembled by Comblémine, such regular updates are not possible, so the digital renderings become the most vital element of the design process.

Comblémine

With a design that Armand felt was ready for production – this was phase 3 – he went to dial maker Comblémine in Val de Travers to discuss a technical solution on mounting the dial in the watch, while retaining the versatility of different dial materials. But because his intention was to build the watch himself, the design had to take into account the limited production facilities of his workshop.

The enthusiastic team at Comblémine, with director Christophe Beuchat (third from left)

Majority owned by Kari Voutilainen, Comblémine is known for the elaborate dials it produces for many independent watchmakers, including MB&F for instance, but its clients also include far bigger brands. Director Christophe Beuchat has built up a workforce of 17 specialists who are skilled and highly enthusiastic.

Armand was surprised to find that Comblémine is not only a dial maker, but a fully integrated manufacture that also does movement development and production, which it performed for the defunct Tulloch T-01. With Mr Beuchat's professional background, this vertical integration was a natural development. From 1991 until 2008 he worked at Vaucher and Parmigiani in different functions, starting off in restoration, where he worked for a time with Kari Voutilainen, who also got his start at Parmigiani's restoration workshop.

When Kari started his own brand, he recruited Mr Beuchat to help with the development of Voutilanen movements. In 2008 Mr Beuchat founded his own business as constructor for third parties, covering all aspects of the development of a watch, from R&D to technical calculations.

And then his career took a turn not unlike Armand's own: Mr Beuchat sold his business to Le Temps Manufactures Fleurier in 2014, because he was spending more and more time on administration and management, leaving almost no time to work as a watch engineer. When Kari offered him the chance to run Comblémine in 2017, it was the perfect opportunity to add dial making to his professional repertoire, which now covers everything involved in building a watch.

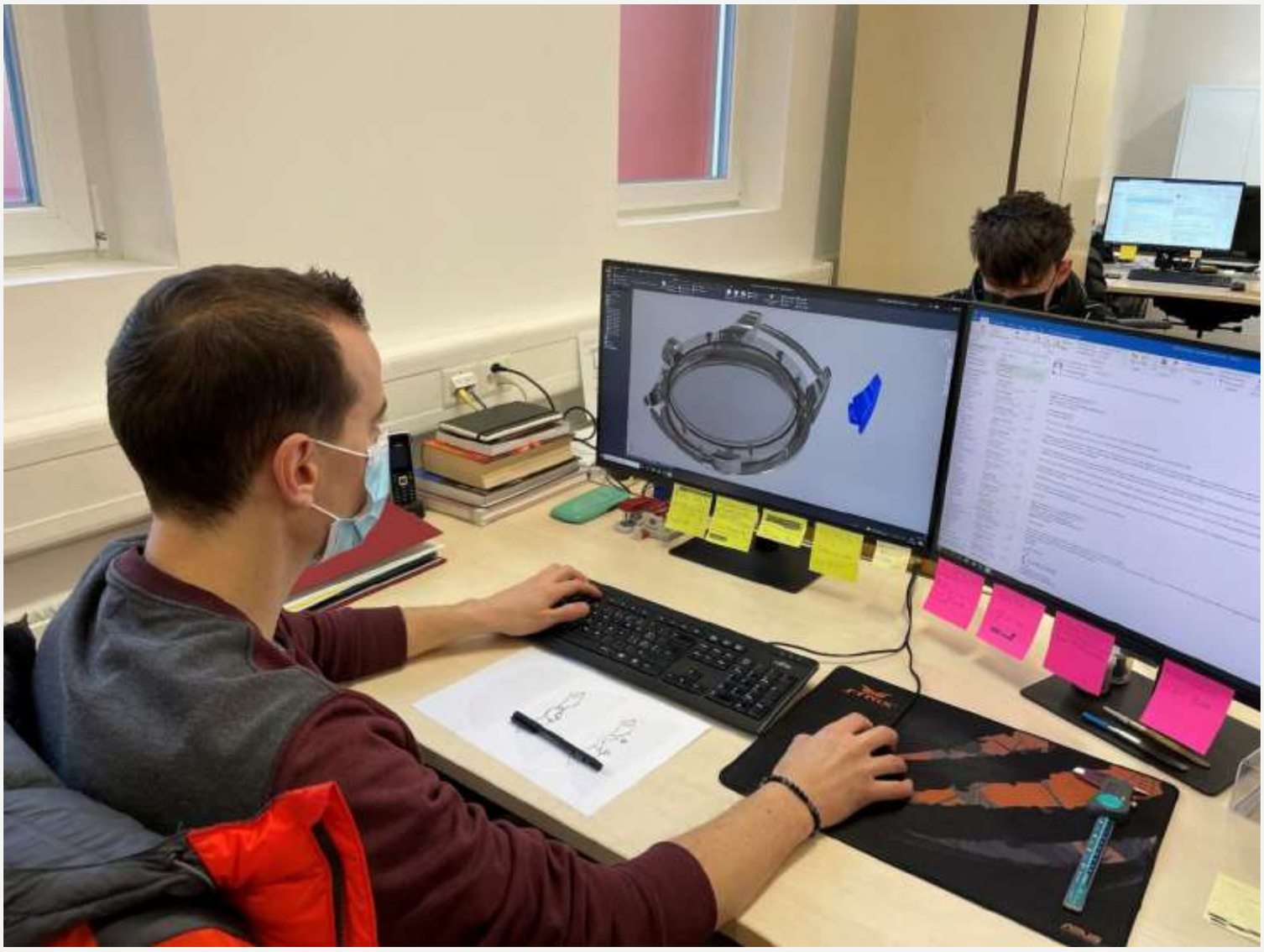

Engineer Stéphane constructs the parts for Comblémine as well as case maker Voutilainen-Cattin, but the Voutilainen brand retains some talent exclusively for itself: the brand's movements are designed by two dedicated constructors in the separate Voutilainen workshop

Another part of Kari Voutilainen's network of companies is case maker Voutilainen & Cattin located in the Jura mountains at Le Noirmont. While Voutilainen & Cattin does the physical work of producing the cases, the construction of cases happens at Comblémine.

The SB05 case grew in sophistication with the input of Comblemine, leading to the final phase of the design, which was then used to debut the watch publicly

When Armand discussed the technical construction of the dial for the SB05, he realised that despite his experience as a designer, constructor, and watchmaker with the SB04, the knowledge and experience on offer at

Comblémine was on a different level. This became obvious because Mr Beuchat himself became so enthusiastic about the SB05 that a brainstorming session with him ensued, where the budget Armand had in mind for the new model was forgotten.

As a result, nobody wanted to return to Armand's early calculations. Rather, Armand delegated the construction to Comblémine, investing heavily beyond his original budget. In addition, for the sake of avoiding compromises in construction, Voutilainen & Cattin got the contract to build a much more sophisticated case than Armand had envisioned with his original budget.

Case production at Voutilainen & Cattin, located an hour's drive from Comblémine and where the cases for the SB05 are produced, by the same machines that fabricate cases for Voutilainen watches incidentally

An ingenious case construction makes it possible to accommodate every kind of dial material without individually adapting each case, offering the enthusiasts total freedom of choice with the dial. And the new construction also meant Armand finally got his beloved separate lugs, although they are screwed to the case to save on the cost of the manual work required if they were soldered. The construction of the case makes it possible to

have the flanks of the case middle subtly convex, while preserving all the different surface decorations (polished, satin brushed, anglage and so on) that are applied to the parts in an industrial workflow, avoiding manual finishing that is not feasible for a watch in the price range of the SB05. Furthermore, the case is available in stainless steel, titanium, gold, or tantalum.

The movements for the SB05 model are produced, finished and assembled at La Joux-Perret and then delivered to Comblémine for casing

While the SB04 comprised of a total of seven parts for case, dial and hands, the SB05 counted 20 parts, all individually finished. Compared to the SB04, the SB05

case costs substantially more, but Armand finds it well worth it, not least to have separate lugs or a front crystal gasket that is truly invisible. Typically, such features – solely for the sake of aesthetics but not something everyone will sufficiently appreciate – are avoided, certainly for watches in the price range of the SB05.

That the SB05 can still be offered at below €10,000 meant that the margins of all the parties involved were trimmed to the absolute minimum. Armand saw this worthwhile to build his brand, and it also demonstrates what is possible when every person involved in a project treats it like their own and gives their all.

The SB05 in steel

La Joux-Perret

Armand is open about the fact that as a designer, his focus is on the dial. Nevertheless, the explicit wish of existing customers for a higher quality movement than found in the SB04 led to a dilemma.

The cost of the Vaucher micro-rotor movement popular with independent brands would have catapulted the SB05 into an entirely different price category. Armand was also keen to use a movement that wasn't widely found in watches by other independent brands.

At La Joux-Perret he found what he was looking for, the manual-wind LJP7380 with a power reserve of 90 hours and a generous diameter of 30 mm, a construction based on the Peseux 7001 gear train. And unlike other movement suppliers, La Joux-Perret did also not ask for a minimum order of 100 pieces, and was instead prepared to accept an initial order of 25 while still decorating the calibre to Armand's specifications.

To match the modern design of the dial and case, Armand opted for circular brushing on the bridges, anthracite colouring, and a raised section on the three-quarter plate that can accommodate engraving or personalisation.

The rendering of the movement (left) gave customers a good impression of the finished parts even at the conceptual stage, while the finished prototype movement (right) revealed a more discreet frosting of the balance cock, resulting in a more modern look than the render implied. For Sartory-Billard such renderings have been the most important tool for successful communication with

clients without meeting in person, as most customers prefer.

La Joux-Perret delivers finished movements to Comblémine, which then assembles the SB05, which means modifications to the movement are not possible. The streamlined logistics needed for the favourable price of the SB05 cannot accommodate such individualism for the calibre.

Comblémine's case construction for the SB05 was based on the diameter of the movement. This ensured pleasing proportions of all the parts, making a huge difference in terms of aesthetics as compared to relying on a generic, off-the-rack case.

Detail of the SB05 calibre

Diving into the design

To preserve the coherence of the carefully conceived design, Armand incorporated boundaries for customisation. While the options on offer have increased compared to the SB04, certain details are specified in advance as standard. The customisable details are clearly outlined in a “Design Guide” on Sartory-Billard’s website.

For example, the even hour numerals can be Roman, Arabic or Chinese (or a custom font for an extra €2,000), but markers for the odd hours have to remain batons.

Likewise, Armand defined the shape of the hands, leaving only the colour of the tips to be chosen by the customer.

This was all done for the sake of a consistent visual style that Armand finds appropriate for Sartory-Billard, which also helps in building the trademark look of the brand. For anyone seeking a wilder design experiment, the SB04 remains available.

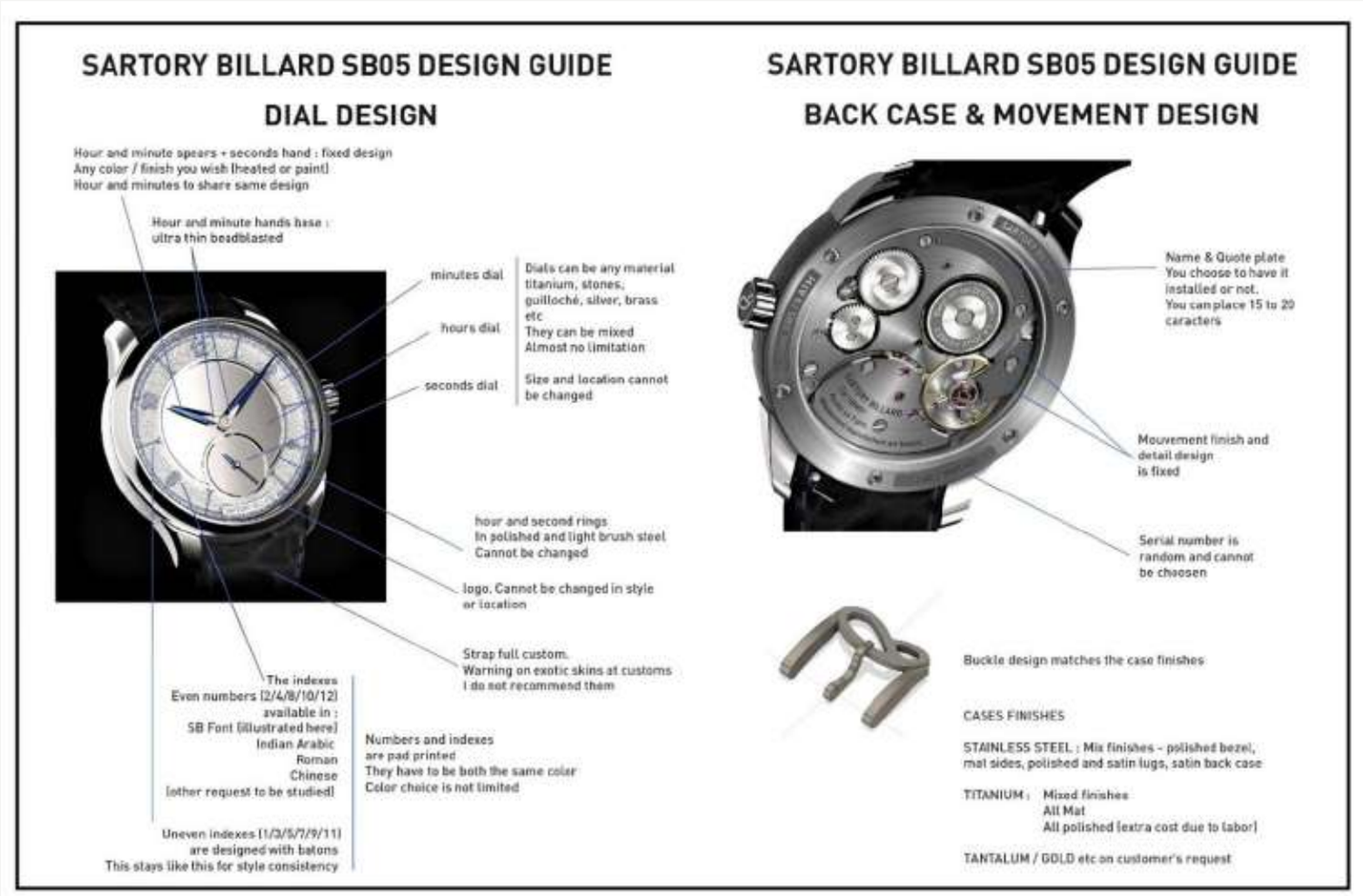

The Design Guide

Armand describes the dial construction techniques practiced by Comblémine “insane”. Seals hold the dial plates inside the case, allowing for different thicknesses of the dial materials.

A production document from Comblémine highlights the numerous, separate elements that contribute to the three-dimensional structure of the dial so important to Armand. The size and thickness of the individual parts enhance the impression of quality, giving it a visual appeal that is easy for a layman enthusiast to appreciate.

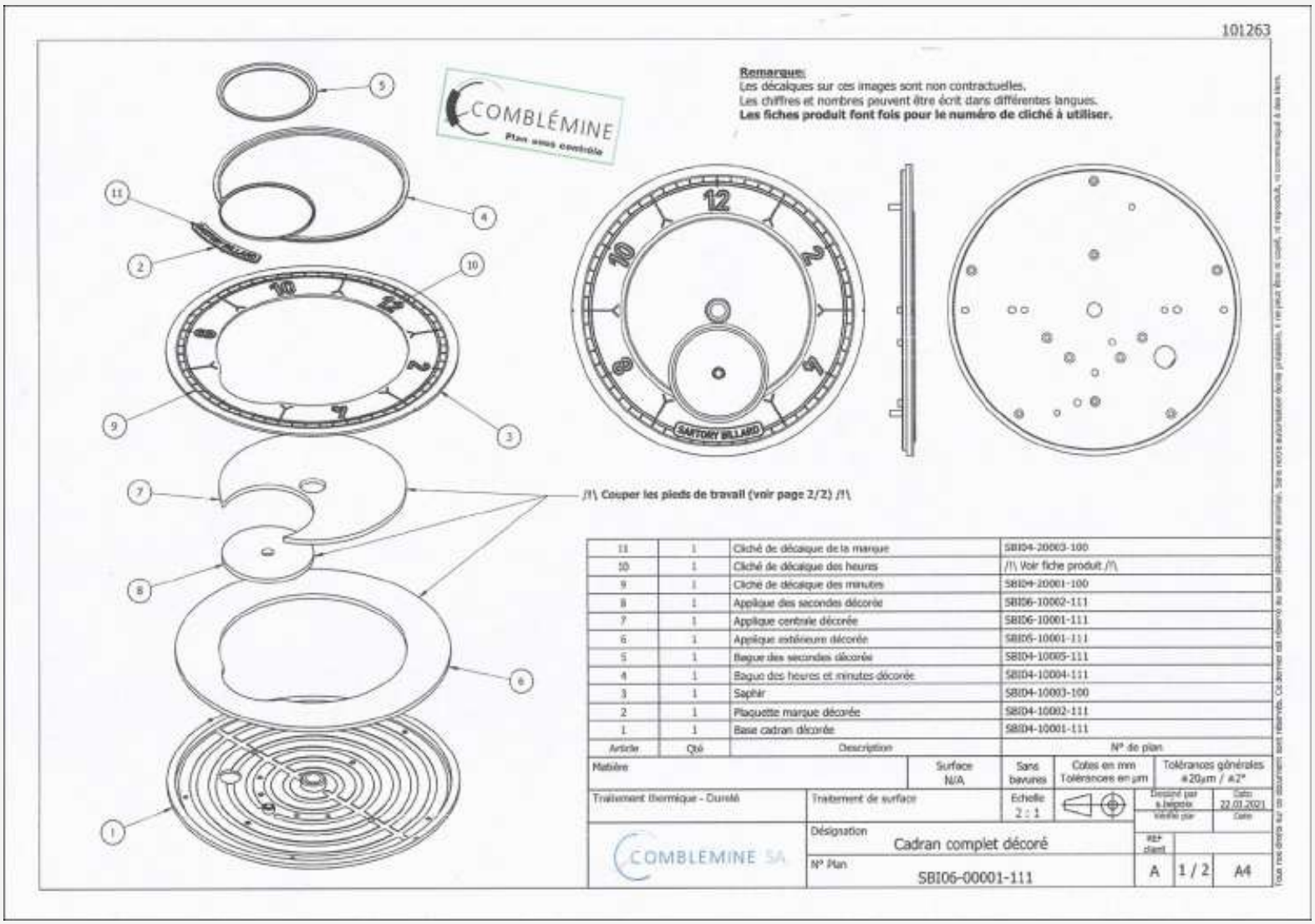

The complex construction of the SB05 dial is apparent up close

In terms of production, the complicated construction of the dial requires skills and care since every dial is different. That brings with it an upside since employees are not burdened with monotonous and repetitive serial production. Motivated staff are indispensable at Comblémine when it comes to such custom work, but they enjoy what they do.

The CNC machines at Comblemine dedicated to manufacturing dial parts. Movement parts, like the basic components for Voutilainen watches, are milled in a separate department.

Lucie produces basic dial parts in a CNC mill, but finishes them manually with diamantine polishing. The decorative rings to hide the joints on the dial are finished on a manually-operated lathe.

A selection of the many parts constituting the SB05 dial as they emerge from CNC mills (trim ring at top and dial base plate below), with one sample on each tray showing the final stage after finishing has been applied

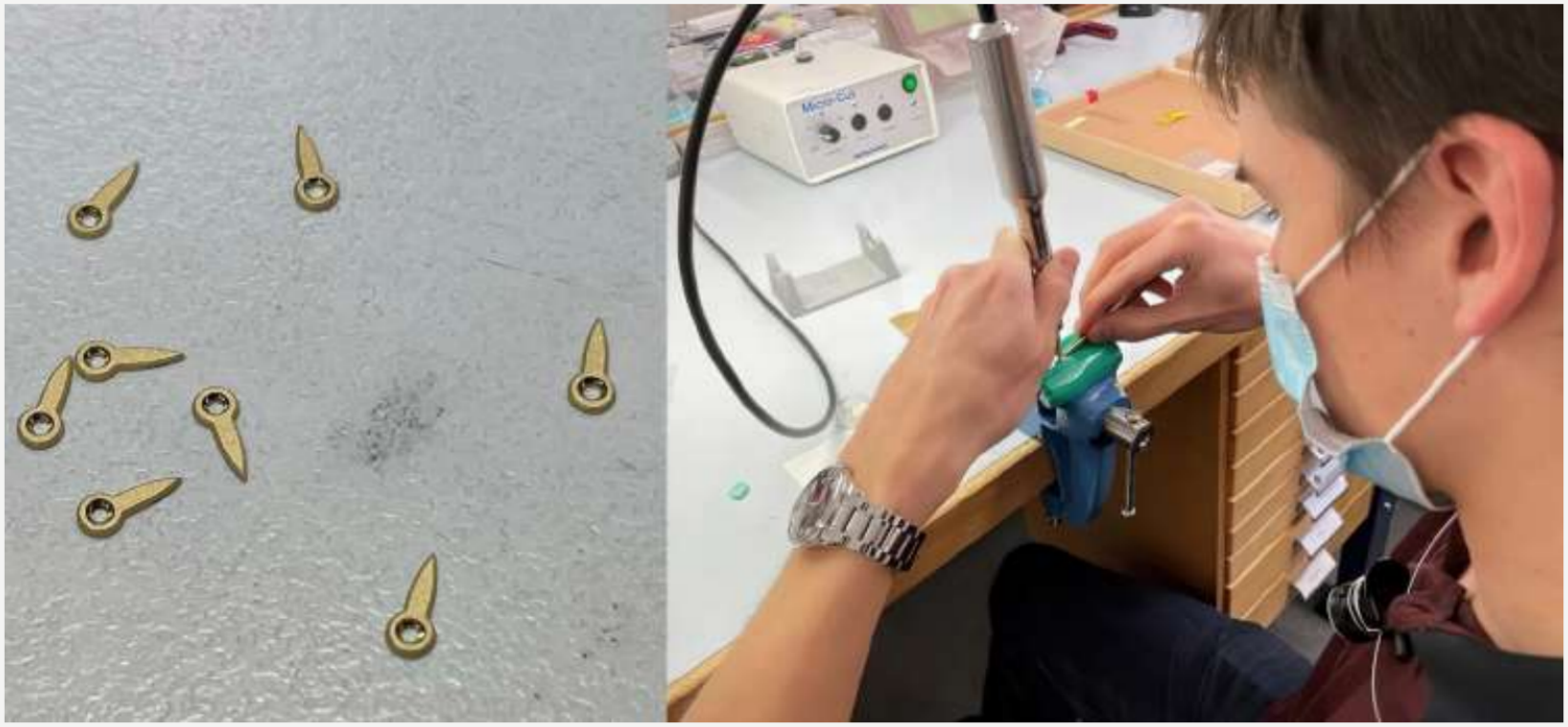

Comblémine operates a workshop for traditional hand finishing like bevelling and black polishing, where the specialists even mix their own polishing pastes and fabricate wooden tools. Such time consuming and thus expensive finishing is avoided on the SB05, which uses two-part hands that rely on a substantial frosted section for a three-dimensional effect, but that section needs only modest polishing with an electric tool to bevel the rim of the eye.

The two-part hands of the SB05, where the colour of the tips can be selected by customers, but only as far as all three tips are in the same colour

The primary customisable elements of the SB05 are the three separate discs that make up the dial, each of which can be in a completely different material. Here the customer has total freedom to apply creativity to maximum effect.

Beyond materials, another option is *guilloche*. The 32 forms of *guilloché* on offer are all done via CNC engraving at Comblémine. If the customer insists, the Voutilainen workshop is able to do hand-made *guilloche* – for a hefty extra.

I asked Mr Beuchat if the difference between CNC and hand-made *guilloche* can be detected by the enthusiast, and he responded that any attempt to do that would likely be in vain.

The drill bit of the CNC machine technically results in a different engraving profile, with a slightly wider “valley” for the *guilloche* of 0.05 mm instead of 0.02 mm possible with *guilloche* done on a straight-line or rose engine. But that is barely discernible.

And the tell-tale circular markings on the flanks of the

guilloche groves created by CNC engraving (as opposed to the striations resulting from a hand-operated tool) area removed with a process known as *giclage*, or opaque surface colouring, after which they cannot be detected even with a microscope.

One of the few feats that CNC engraving cannot achieve is *guilloche* that progressively shrinks in scale towards the centre of the dial, something that can only be done with the versatility of the oldest hand-0perated *guilloche* engines.

Samples of the 32 guilloche patterns are presented with a

uniform silver plating. This allows a comparison of how light and shadow influence the visual impression, with some patterns appearing too busy in the light.

An example of guilloche on the SB05

The electroplating department is central to a dial factory. At Comblémine, the gentlemen responsible for this are Steve and Martin. The former explains that a Pantone colour code specified by a customer is merely the start of the treatment process.

The dials for the SB05 are all unique creations done according to the client's wishes, and even Armand himself does not order duplicates as spare parts or ready stock.

The finishing of the dials that starts with mechanical treatment – sun-ray brushing, circular graining, or *guilloche* – which is then followed by electroplating and most often concluded with *zaponnage*, or applying a clear, protective lacquer, in the workshop next door. With the SB05 dials being individually unique, the parameters of the process have to be individually determined for each of the three dial parts, for every dial ordered.

Opaque lacquer is rarely used, because guilloche or brushed finishes are most visible under transparent zapon, which achieves the desired three-dimensional appearance

The multi-faceted, ever changing dial-making process is only manageable with a skilled and experienced specialist executing everything from start to finish – from setting up the various chemical solutions for electroplating, including determining the composition and temperature of the solution, as well as the “bath time” required for the plating.

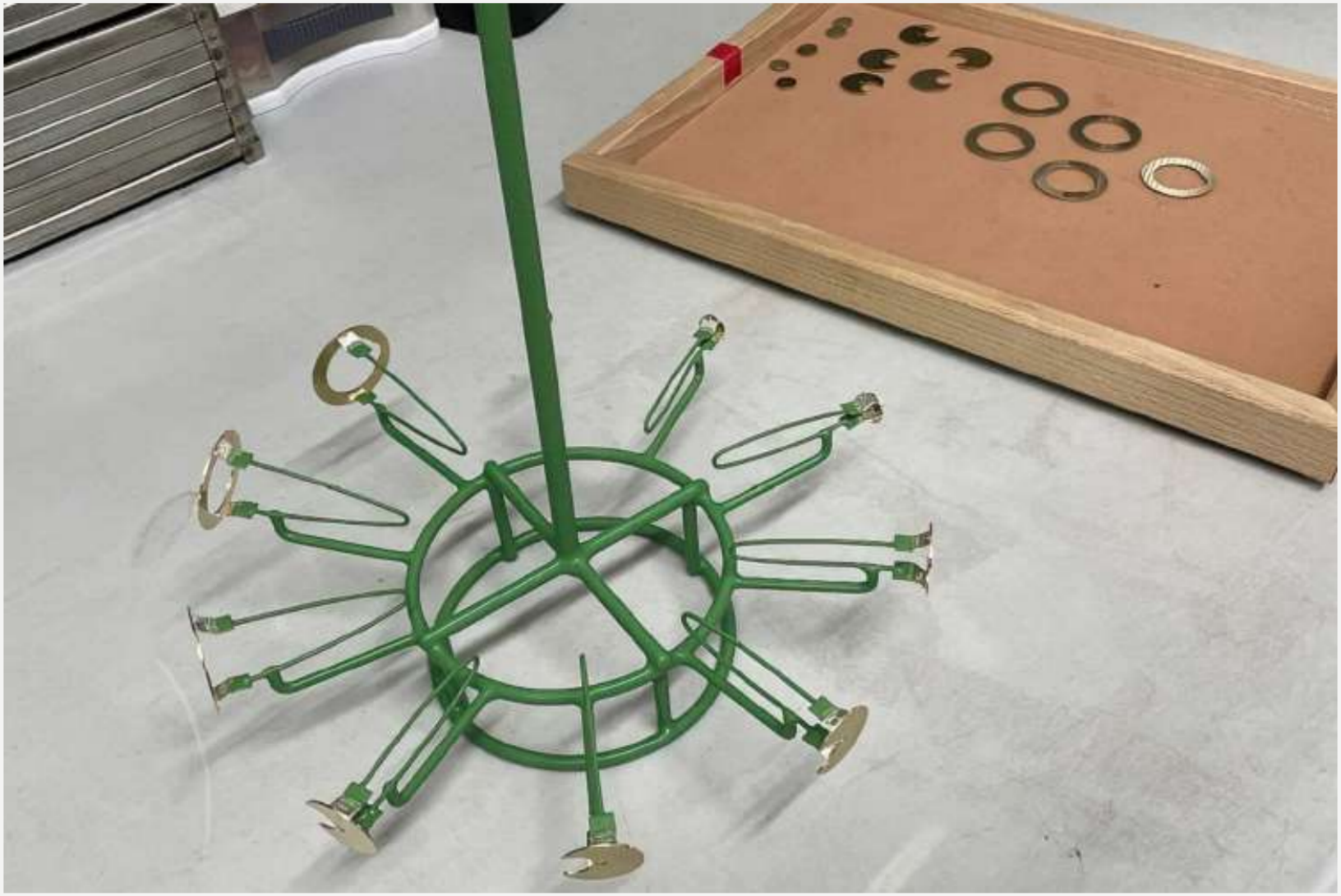

Having mastered the process end to end, the specialists have a competence that customers can tap into. The open nature of Comblémine means that Mr Beuchat allows customers like Armand, who is decent, respectful and keen to learn, direct access to the firm’s specialists.

The samples done for Sartory-Billard already stacking up at Comblémine. The treatment processes to produce each one are carefully documented in order to reproduce them more precisely than merely working from a Pantone colour code.

These samples show that naming a colour is an insufficient specification. Depending on the treatment, the finished dial looks completely different. Amongst the subtleties of the colouring is the surface finish, either matte or glossy and the degrees in between, which results in completely different colour. For yet another result, the colour can be applied solely with electroplating.

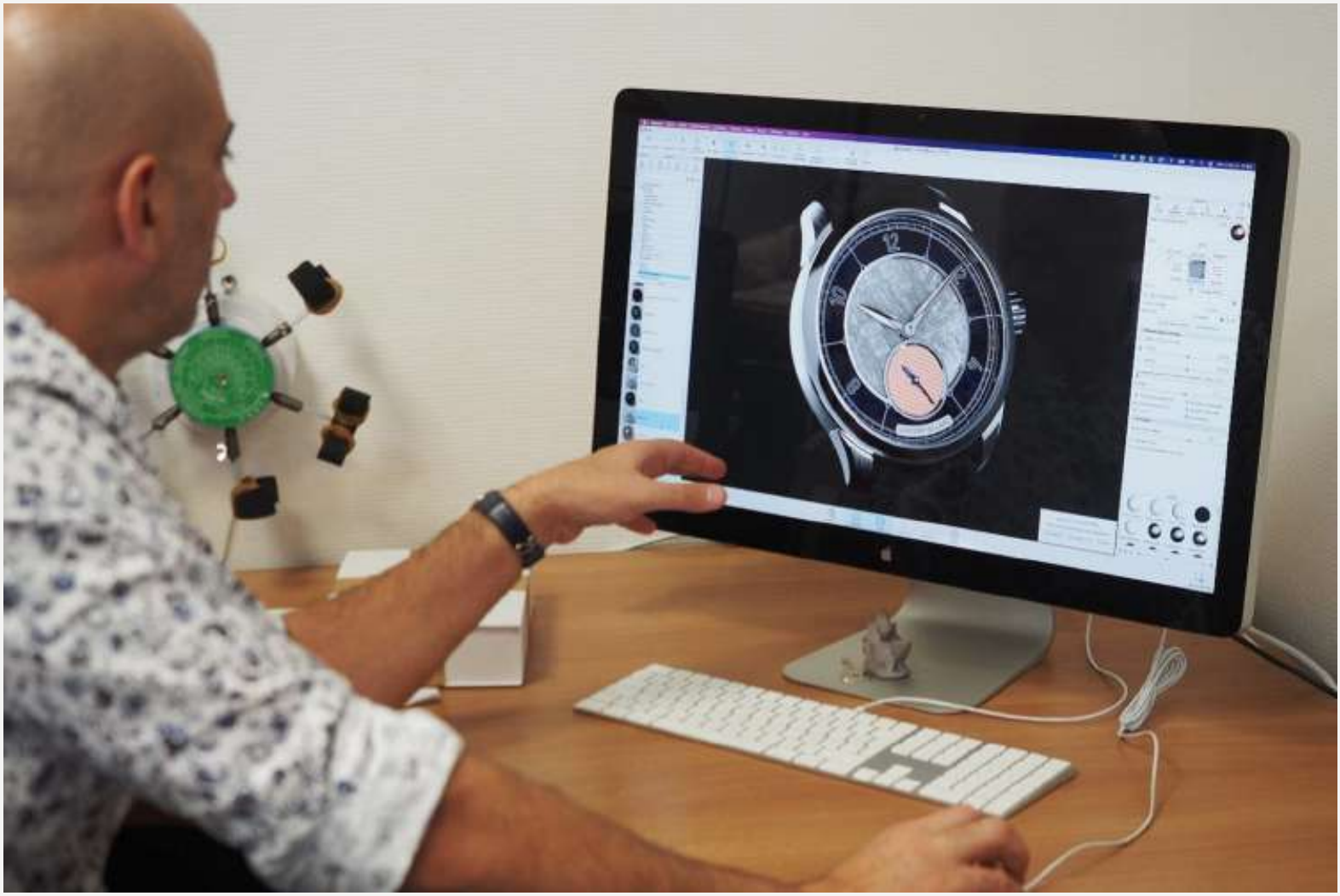

Comblémine also works with local suppliers like a local pad-printing outfit that does three-dimensional dial printing on the sapphire chapter rings for the SB05 dials

The SB05 in guilloche with pad-printed chapter ring

Here the base of the chapter ring is aventurine glass

Going beyond conventional metal alloys, customers can also choose from a variety of stone or minerals for any of the three dial parts. Here Armand works with German supplier Groh & Ripp for maximum versatility in materials. Once again he emphasises the importance of the relationship with the supplier – they have to like him and the products he creates for customers.

That's especially crucial since the characteristics of natural stone or minerals mean that Armand needs to get the best out of Groh & Ripp. He prefers stones with darker and higher contrast graining to enhance the three-dimensional effect. At the same time grain has to be aligned correctly to appear pleasing on a dial. As a result, Groh & Ripp has to understand Armand's requirements, while also be willing to take the time to select just the right piece of stone, despite Armand's tiny orders, essentially a single dial at a time.

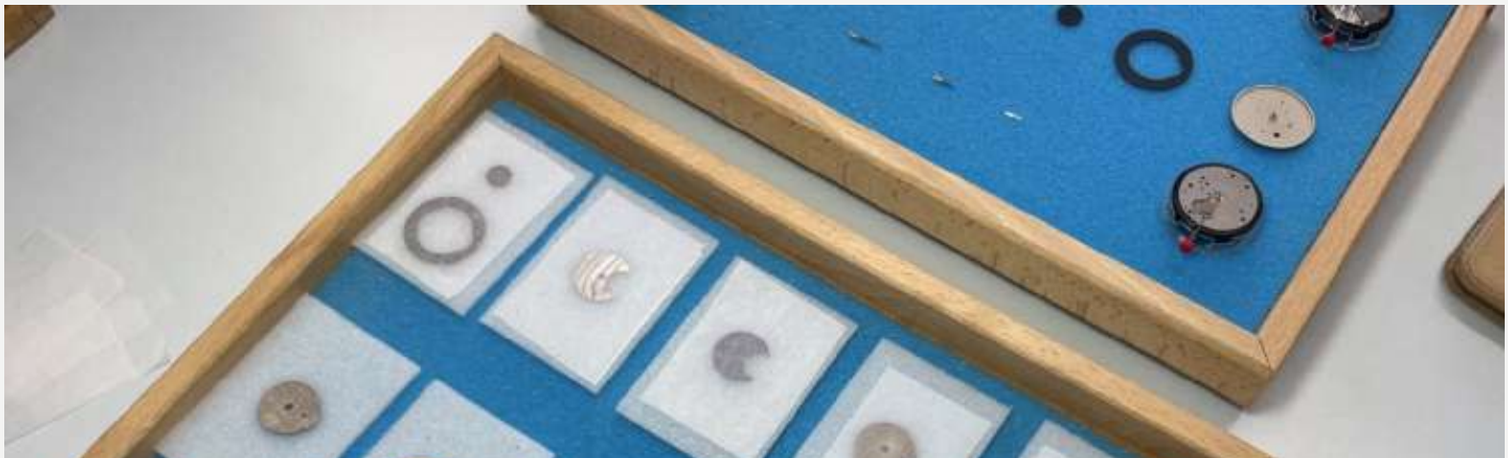

The delicate stone dials for the SB05 are delivered directly to Comblémine by the supplier. Armand keeps his speciality, the production of titanium dials, at his atelier and delivers also the finished parts for assembly to Comblémine.

To that end, Armand takes care to cultivate his relationships with suppliers, both on a personal and commercial level.

He makes sure that suppliers understand his appreciation for their work, while also ensuring he himself has a good knowledge of the technical and industrial processes that create the component.

Armand also knows not to squeeze suppliers for the lowest price, but instead work off a fair price amenable to both sides and instead push for the best quality product. And of course paying bills on time.

Despite spending most of his working hours on Sartory-Billard watches, Armand himself appreciates the good work of other designers – he is a happy owner of the Alain Silberstein-Louis Erard chronograph.

Back to top.

You may also enjoy these.

Independent Watchmaking Showcased Virtually

From Daniels to Daners, by The Hour Glass.

SJX © 2011-2022. All rights reserved.